ADC Lab Logbook

Part 4 | Section 1: Current Mirror and Current Source

Section 1: Current Mirror and Current Source

Aim

To explore how BJT building blocks can achieve the properties required for an operational amplifier, beginning with the current mirror — a fundamental bias circuit used to set and replicate currents in analogue integrated circuits.

An ideal operational amplifier has: very high differential gain, very low common-mode gain, very high input impedance, and very low output impedance. A typical opamp consists of three cascaded stages: a differential input stage, a high-gain stage, and a power output stage.

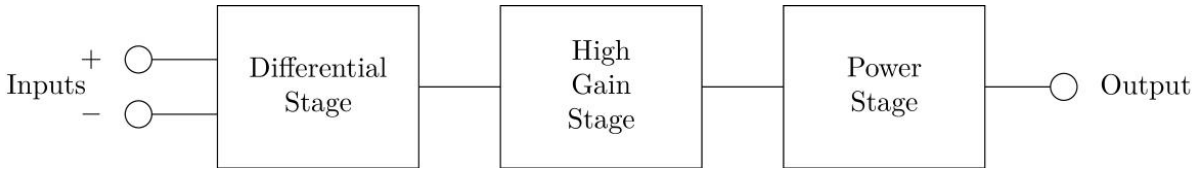

Simple Current Mirror

Circuit Description

The simple current mirror uses two matched PNP transistors (2N2907), T_1 and T_2, with their bases and emitters connected together. T_1 is diode-connected (collector tied to base), and its collector current I_{in} sets the reference. T_2 mirrors this current at its collector: $I_{out} \approx I_{in}$. A resistor $R_1 = 4300\ \Omega$ sets $I_{in} \approx 1$ mA (with $V_{CC} = 5$ V), and $R = 470\ \Omega$ is the output load. The output voltage V_C is swept from −15 V to −5 V.

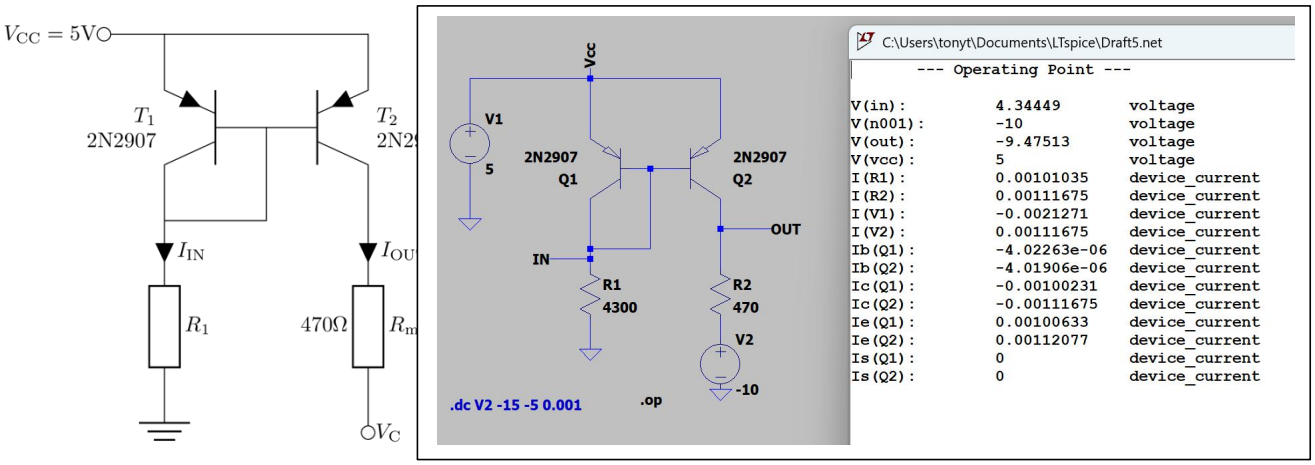

DC Operating Point Simulation Results

From the LTspice operating point simulation at $V_C = -9.47$ V:

- **I_{in} (I(R1)):** 1.01035 mA
- **I_{out} (I(R2)):** 1.11675 mA
- **Current transfer ratio:** $I_{out}/I_{in} = 1.11675 / 1.01035 \approx 1.10$

The transfer ratio deviates slightly from unity, primarily because I_{in} includes the base current of T_2 in addition to its collector current. Since β is finite, this causes $I_{out} \neq I_{in}$ exactly.

Output Resistance

Ideal output resistance: using the Early voltage V_A = 120 V from the 2N2907 datasheet and I_C = 1.117 mA:

$$r_o = V_A / I_C = 120 / 1.117 \times 10^{-3} \approx 107\ k\Omega$$

Actual output resistance from DC sweep (ΔV_C = 10 V, ΔI_{out} = 1.115 − 1.075 = 0.040 mA):

$$R_{out} = \Delta V_C / \Delta I_{out} = 10 / (0.040 \times 10^{-3}) \approx 120\ k\Omega$$

The measured value of 120 kΩ is consistent with the ideal prediction of 107 kΩ, confirming that the output resistance is dominated by the Early effect of T_2 .

Simulation for measuring $\Delta V_C / \Delta I_{out}$

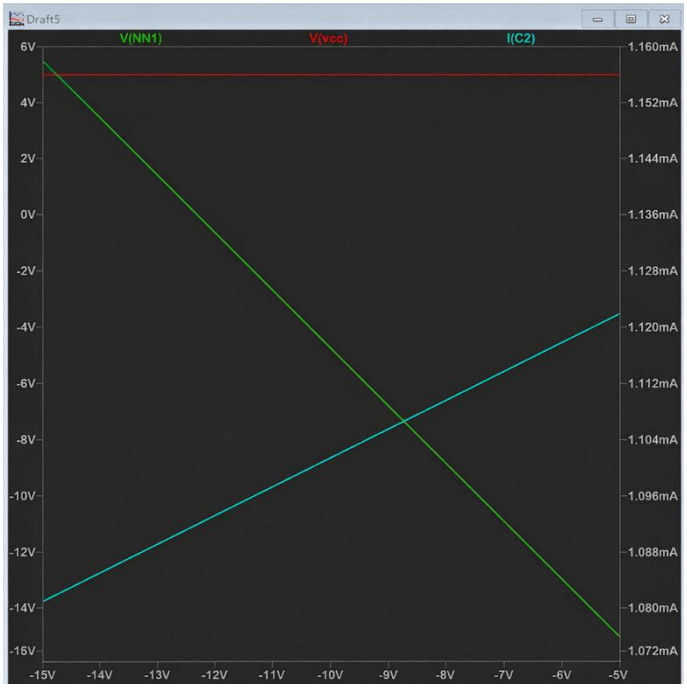

Wilson Current Mirror

Motivation for Improvement

The simple current mirror has three principal sources of inaccuracy:

- **Transistor mismatch:** I_C for T_1 and T_2 is equal only if the transistors are perfectly identical. In practice, V_{BE} offsets cause a small difference.
- **Finite β (base current error):** I_{in} includes the base current of T_2 ; since β is finite, not all input current is reflected to the output.
- **Finite output resistance:** Due to the Early effect, I_{out} depends on V_{CE} of T_2 , causing I_{out} to vary with the output voltage.

The Wilson current mirror addresses all three issues by inserting a third transistor T_3 between the input and output branches, introducing local negative feedback.

Wilson Mirror — Design

With T_3 added, the input node voltage becomes $V_{CC} - 2V_{BE} \approx 5 - 1.43 = 3.57$ V. R_1 was selected as 3600 Ω to maintain $I_{in} \approx 1$ mA:

$$I_{in} = (V_{CC} - 2V_{BE}) / R_1 = 1.43 / 3600 \approx 0.397\ mA \rightarrow adjusted:\ R_1 = 3600\ \Omega\ gives\ I = 1.00\ mA$$

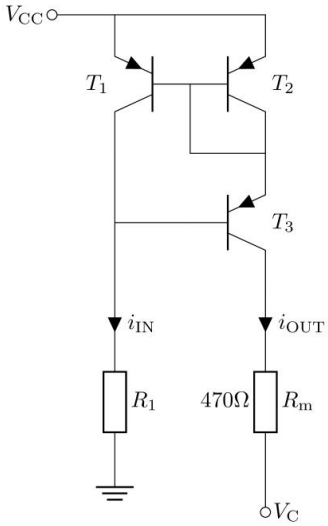

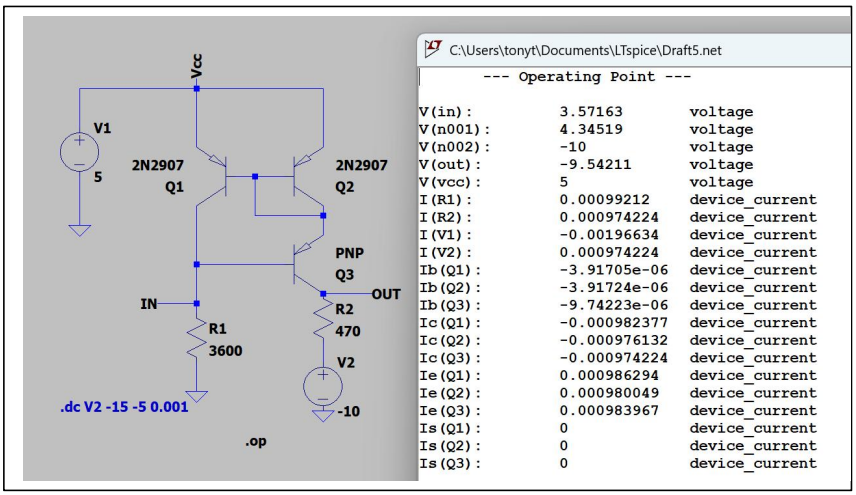

Wilson Mirror — Results

From the operating point simulation:

- **I_{R1} :** 0.992 mA
- **I_{R2} :** 0.974 mA
- **Transfer ratio:** $I_{R2} / I_{R1} = 0.974 / 0.992 \approx 0.982$ (very close to 1)

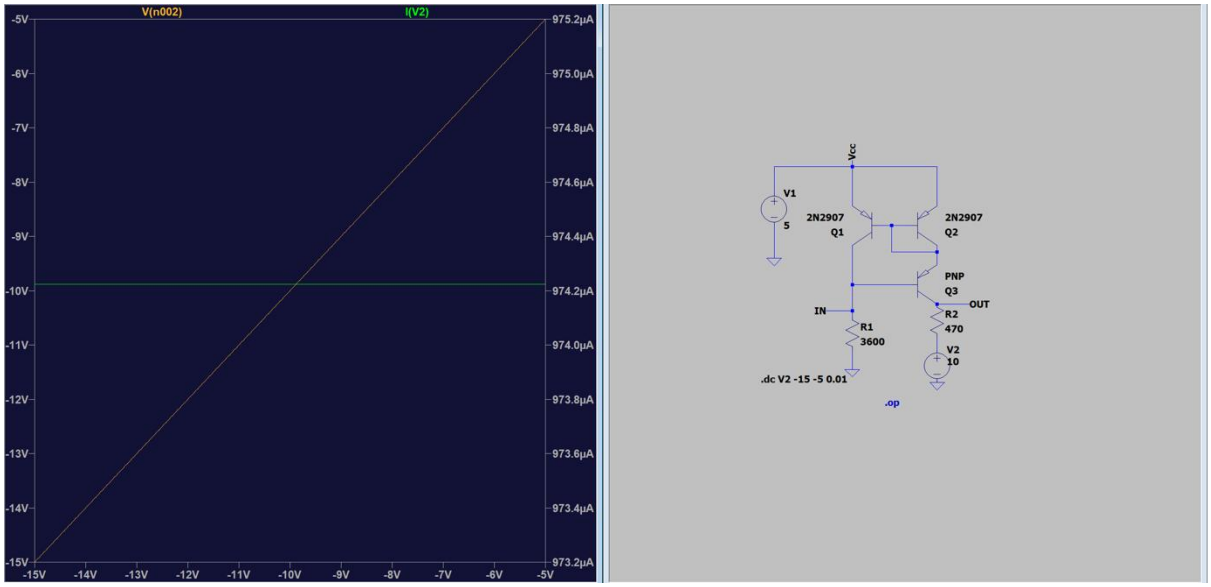

From the DC sweep, the output current varies by only ΔI = 2 µA over a 10 V range:

$$R_{out} = \Delta V / \Delta I = 10 / (2 \times 10^{-6}) = 5\ M\Omega$$

The output resistance has increased from 120 kΩ to 5 MΩ.

Improvements of the Wilson Mirror over the Simple Mirror

The Wilson current mirror improves on the simple mirror in two key respects:

1. Current accuracy. The transfer ratio I_{out}/I_{in} is much closer to unity (0.982 vs 1.10). The additional transistor T_3 introduces negative feedback that compensates for the finite-β base current error, significantly improving current matching.

2. Output resistance. R_{out} increases from 120 kΩ to 5 MΩ. The feedback loop suppresses the Early effect's influence on I_{out}, making the output behave more like an ideal current source. A higher output resistance is critical when the mirror is used as an active load in a high-gain amplifier stage, since the voltage gain is proportional to the load impedance.

Trade-off: the Wilson mirror requires one additional transistor and needs approximately one extra V_{BE} ≈ 0.7 V of voltage headroom, reducing the available output voltage swing.

Wilson Current Mirror — Base Current Error Derivation

1. Simple Mirror (error ~ 2/β)

Both T_1 and T_2 are matched with gain β. KCL at the input node:

$$I_{in} = I_C + I_{B1} + I_{B2} = I_C + 2 \cdot I_C/\beta = I_C(1 + 2/\beta)$$

So $I_{out} = I_C = I_{in}/(1 + 2/\beta)$, giving a fractional error of:

$$\boxed{E_{simple} = (I_{in} - I_{out}) / I_{in} \approx 2/\beta}$$

2. Wilson Mirror (error ~ 2/β²)

T_3 is inserted as a buffer. Let $I_{out} = I_{C3}$. Express all currents in terms of I_{out}:

$$I_{B3} = I_{out}/\beta$$

$$I_{E3} = I_{out}(1 + 1/\beta) = I_{C2} = I_{C1} \qquad (\because T_1, T_2 \text{ matched})$$

KCL at the input node (T_3's collector supplies the bases of T_1/T_2, so only $I_{\Lambda 3}$ loads $I^{ИИ}$):

$$I_{in} = I_{C1} + I_{B3} = I_{out}(1 + 1/\beta) + I_{out}/\beta = I_{out}(1 + 2/\beta)$$

This gives the same form as before, but note I_o^u here already includes the (1+1/β) factor from T_3's emitter. Expanding to second order:

$$I_{out} = I_{in} \cdot \beta^2 / (\beta^2 + 2\beta) = I_{in} \cdot 1/(1 + 2/\beta)$$

The fractional error, expanded to second order in 1/β:

$$\boxed{E_{wilson} = (I_{in} - I_{out}) / I_{in} \approx 2/\beta^2}$$

Physical reason: T_3's collector supplies $I_{B1} + I_{B2}$, so those base currents no longer subtract from I_{in}. Only $I_{B3} = I_{out}/\beta \approx I_{in}/\beta$ loads I_{in}, and this is itself already a 1/β quantity, making the net error 1/β × 1/β = 1/β².